REV: 1/037/1.2

LIGHTING SOLUTIONS

SL550 OPERATING INSTRUCTIONS

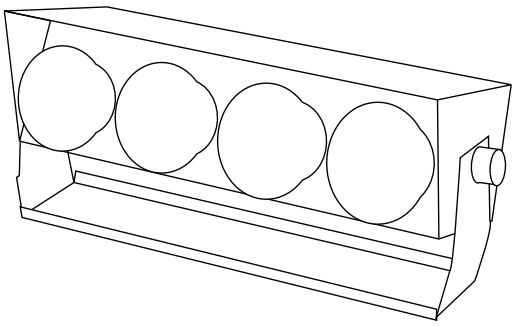

Congratulations on your purchase of the SL550 disco lighting unit. Please read the following instructions carefully before use.

INSTALLATION

For your convenience a mains plug with a 3 Amp fuse has been supplied with this appliance. This is placed into the power socket on the rear of the SL550. For your safety please observe the following information.
The pulsing disco lighting unit is designed to operate on AC mains supply between 220 and 240 volts, 50 Hz.
The wires in the mains lead are coloured in accordance with the following code:

GREEN AND YELLOW	EARTH
BLUE	NEUTRAL
BROWN	LIVE

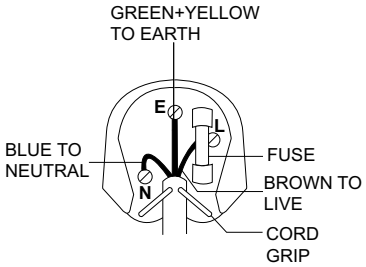

IN USE

The disco lighting has four lamp circuits. These lamps are arranged in four different colours, yellow, blue, red and green. They provide a ‘chaser’ effect, the pulse rate depends upon the rhythmic characteristics of the local sounds. A direct audio connection is not required as there is an inbuilt acoustic detector. There are two controls on the rear of the unit. The first is ‘Sensitivity’. By turning this clockwise, the audio gain to the unit is decreased. The other control is ‘Speed’. By turning this clockwise the pulse rate of the bulbs is decreased. You can assess the sensitivity and speed of the bulbs using the ‘Lamp Status’ LED’s situated on the back of the unit, which mimic the actions of the four coloured lamps.
This unit has a support bracket which can be rotated to adjust the mounting angle. The bracket enables the unit to be fastened to a wall or ceiling, or alternatively folded underneath the light unit, in which case the SL550 is free standing. Care must be taken if the unit is stood on its base. The bulbs will become very hot during use and should be directed away from any flammable surfaces. It is not advised to use the unit on any surfaces susceptible to heat.

REPLACING THE LAMPS

We recommend the Acoustic Solutions replacement lamps which you can obtain by returning the order form below. If a lamp fails from new, please call the Acoustic Solutions Helpline. When calling, please have the following information ready: serial number (on the base of the bracket), place and date of purchase and receipt. It is important that the equipment is disconnected from the mains supply before replacing the lamps. The lamps are 240volt, 60watts ES.
UNDER NO CIRCUMSTANCES SHOULD THE WATTAGE OF ANY LAMP EXCEED 60 WATTS.

CAUTION: DANGEROUS VOLTAGES EXIST INSIDE THIS UNIT. DO NOT REMOVE ITS COVER. REFER SERVICING TO QUALIFIED SERVICE PERSONNEL. DISCONNECT FROM THE MAINS SUPPLY WHEN NOT IN USE.

For more help with this product contact the Acoustic Solutions Helpline: 01327 340601. Please be advised this line is manned 9am to 4.30pm Mon-Fri.

SL550 REPLACEMENT LAMPS SPECIAL OFFER.
SET OF ALL FOUR COLOURS FOR £6.99 INC P+P

Please send me ..... packs of four replacement lamps at £6.99 each pack = £.....p

Payment method (tick one) ☐ Cheque ☐ Credit/Switch card

Credit card type ..... Number ...../...../...../.....

Card name ..... exp date.....

Issue number (switch only)..... Please charge my card £ .....p Signature.....

Name.....

Address.....

..... Post Code.....Tel No.....

Send completed form to:

Spares Orders. Acoustic Solutions Ltd, Grand Union Buildings, 54 High Street, Weedon Bec, Northants. NN7 4QD . UK
Helpline Number +44 (0) 1327 340601.
Email enquiries@acousticsolutions.co.uk